Itotec Paper Cutters – Since 1919

Itotec, manufactured in Japan, has been producing Paper Cutters, and Ancillary Cutting equipment for over 100-years. Headquartered in the city of Nagoya – home of Toyota – Itotec is a 6th generation family business with an install base of more than 10,000 Paper Cutters worldwide.

Itotec Guillotine Cutters are very operator friendly and ergonomic. With proper table height, easy to use touchscreen for programing and other important maintenance instructions, your operators and maintenance personnel will enjoy working with, and on, it. Itotec has been innovative in the design and operation of Guillotine Cutters since 1919 so they have over one hundred years of expertise and "know how" related to the current model that you see today.
As a testament to innovation and design, Itotec was the first manufacturer of a double arm pull knife and clamp Guillotine Cutter. The current models in the SC and eRC series are machines that are designed with all knife adjustments from the front of the Cutter. This has been an Itotec design for well over 30 years. Standard features include a clamp hydraulic pressure change lever, as well as the knife holders that we'll discuss in the knife changing process below.

Knife Changing Procedure

As a reminder, safety should be the number one priority while doing a knife change.

Removal of the Old Knife

1. Set out all required tools so they are within reach and handy. You want the change to be a smooth operation with no interruptions.
2. Remove the first two left hand knife bolts located inside the left-hand front door. This is done by stopping the blade cycle at bottom dead center to access the knife bolts.
3. Move the hydraulic control lever by the operator's left knee from "Cutting" to "Knife Change". This gives slower and easier control of the clamp speed, which is important in upcoming steps.
4. Locate the knife support bolts, which are between the cut buttons at the operator's waist. Lower the clamp slightly to expose the threaded holes in the clamp for the knife support bolts. Insert the knife support bolts into the threaded holes in the clamp while holding the clamp slightly down.
5. Release the clamp pressure slowly to bring the knife support bolts up to the blade.
6. Remove the two knife bolts at the positions of the slot.
7. Thread the knife handles into the knife holes lined up with the slot in the knife bar.
8. Remove the remaining knife bolts.
9. Set the knife holder assembly onto the cutting table and line the holders up with the knife bolts in the left and right slots.
10. Loosen slightly the knife handles and lower the knife while engaging the clamp peddle. Holding onto the knife handles, guide the knife handles into the knife holders. Remember that safety is most important, not speed.
11. When 1) the knife handles reach the knife holders, 2) the knife handles are well into the slots and 3) the angle of the knife hits the screws in the knife holder, stop the downward motion of the clamp and tighten the knife handles onto the knife holders. Do not bottom out the clamp onto the knife holders because you are at a point at which you need to slide the knife.
12. With the clamp foot pedal, lower the clamp so the knife support bolts holding the knife are out of the way of the knife edge.
13. Pull the knife toward you to allow the clamp to be returned to its up position. The knife support bolts should be clear of the back of the knife for an unobstructed return to the top.
14. Slide the knife to the left to clear the frame on the right side. Pull the right side of the knife out and slide it to the right, bringing the whole knife out of the Cutter throat.
15. Position the knife sheath board flat on the cutting table, near the edge of the Cutter.
16. Place the knife on the knife sheath board and securely fasten it to the board with the provided bolts before doing anything else.
17. Your old knife is now removed and safe for storage.

Installation of the New Knife

Since you have removed the old knife and are going to replace it with a sharp knife, you will already have the knife support bolts in the clamp. Similarly, the hydraulic control lever will already be in the knife change position.

1. Set the newly sharpened knife, in the sheath, onto the Cutter table near the front.

2. Unbolt it from the sheath and insert the knife handles into the same threaded holes

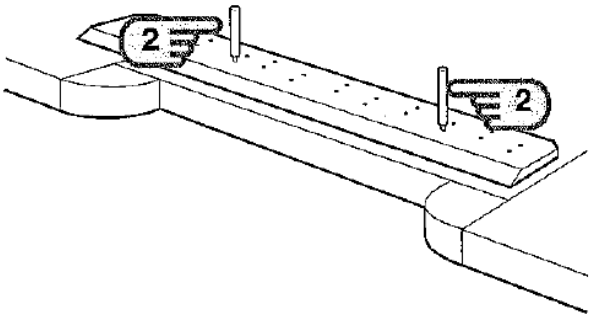

3. Attach the knife holder assembly to the knife and secure it with the knife handles. Pay attention to the screws in the knife holder and rest the angle of the knife so it is just touching the screws.

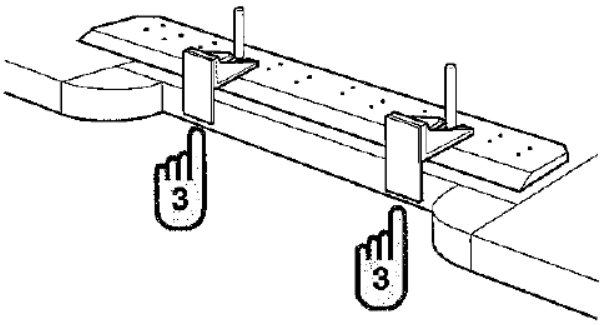

4. Lift the knife, in the holder assembly, up so it is sitting upright on the cutting table.

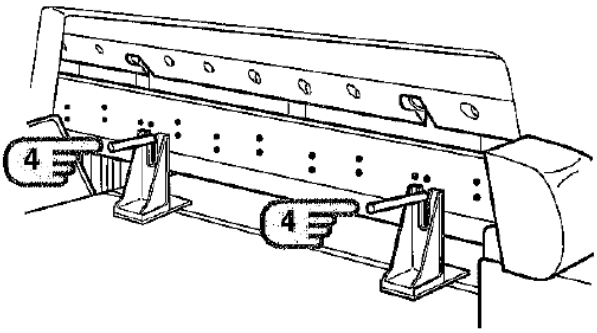

5. Slide the knife into the knife bar area, but not up tight against the clamp or knife bar.

6. Lower the clamp slowly until it is just above the knife holder feet. Maintain this height.

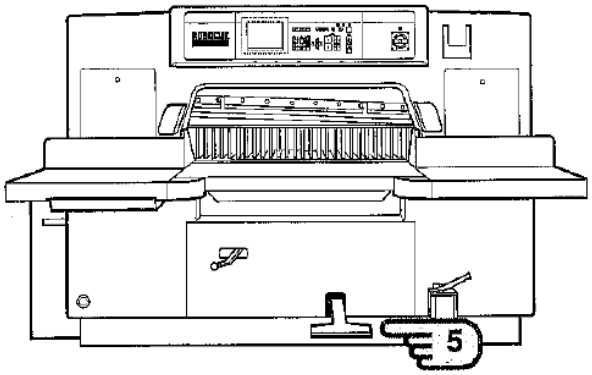

7. Slide the knife, in the holder, up against the clamp's white strips and align the knife handles with the slots in the knife bar.

8. Lift the clamp slowly with your foot so the knife support bolts engage with the knife.

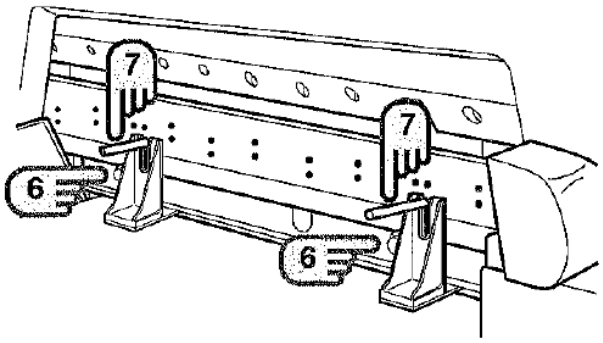

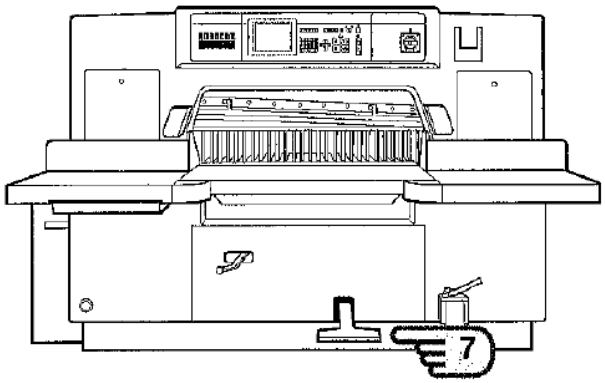

9. As the clamp is raising the knife, loosen the knife handles just enough to release the knife holders and slide the knife handles up into the slots in the knife bar.

10. The knife and clamp will stop when the knife handles hit the top of the slot and you can stop.

11. At this point, use the knife alignment tool to fine tune the holes to the knife threads and install the knife bolts that can be seen. Start from the middle bolts and alternate out from left to right.

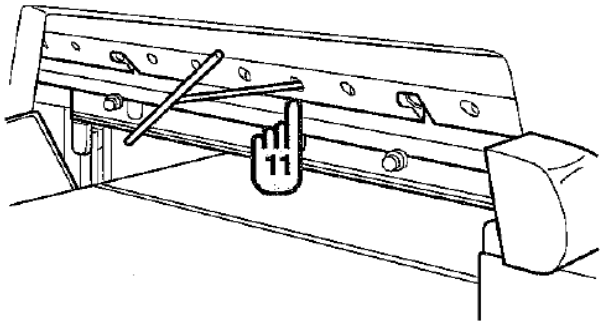

12. Remove the knife handles and replace the screws in those holes.

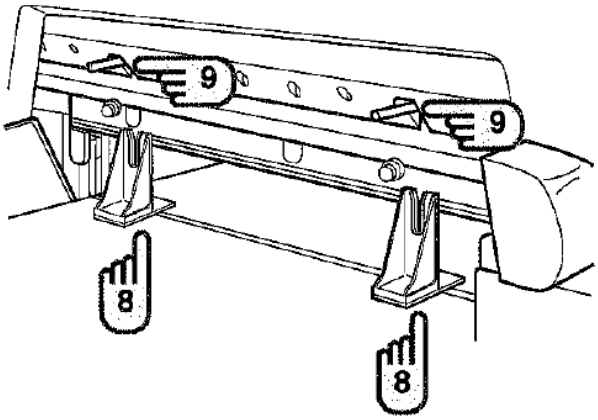

13. At this point, lower the clamp to the cutting table and remove the knife support bolts.

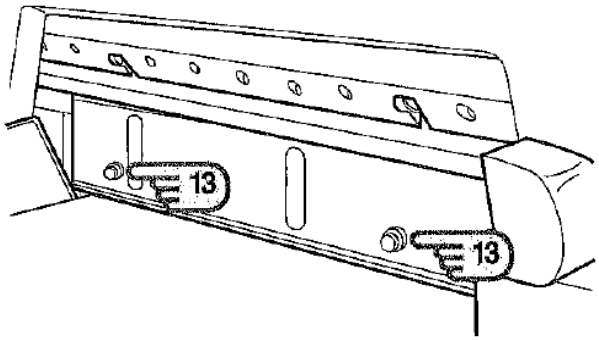

14. Release the clamp to the up position and return the hydraulic control lever to the cutting position.

15. Replace the two bolts at the left end of the knife by again, cycling the knife to the bottom dead center for access to the threaded holes.

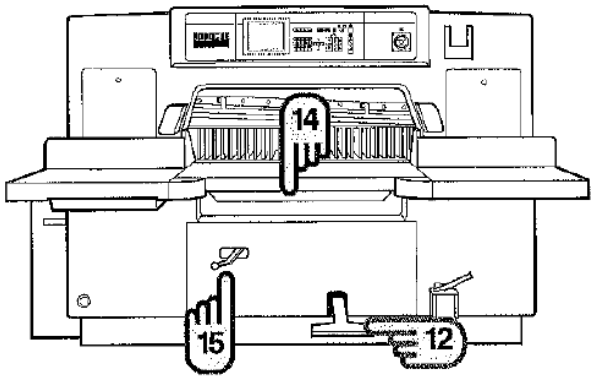

16. Retighten each knife bolt one-by-one.

Knife Adjustment

1. On the face of the clamp you will find two silver and black labels, one on the left and one on the right. The silver line is sandwiched between two black lines and they are horizontal on the clamp. These are references and the knife edge should rest at the upper black line while in the top, stopped position.
2. With both side panels, doors open locate the left and right turnbuckles for adjusting the knife. Above those turnbuckles are locking pins to hold the threaded pull rod in place. These pins pull out to allow the turnbuckle to be moved left or right, depending on if you want the knife to move up or down.
3. To get the knife edge above the sliver line and in the upper black line, pull the pin out and turn it 90 degrees to keep it out. Turn the turnbuckle counter-clockwise to bring the knife up and clockwise to bring the knife down.
4. Rotate or replace the cutting stick so that you have a fresh surface for the knife to cut into.
5. Next, place a few sheets of light weight paper under the knife, at both ends of the throat of the Cutter and set the knife height to the cutting stick.
6. Cycle the knife and see how many sheets were cut. If you, at both ends, cut all the way through and into the cutting stick, you did not start high enough. So, raise the knife up. If you did not cut the bottom sheets at both ends, lower the knife 64th of a turn and try again until successful.
7. Once the sheets are being evenly cut at the ends, put a full width sheet in the Cutter and cycle. Make final adjustments as needed.
8. Replace the panels, doors before beginning production.

FAQ

Q. How many cycles before changing the knife?
A. As a rule of thumb, 5,000 for coated stock, 3,500 for offset stock and 1,500 for chipboard stock. Of course, these are just estimates and the cutting performance is the final determining factor.

Q. What if operator is too lazy to do a knife change and cuts far too long on a dull knife?
A. Program on PLC "locks out" Cutter if operator is negligent. Management personnel must reset before cutting can continue. This could eliminate damage to the knife itself and prolong its use over the life of the knife.

Q. Tell me about double bevel blades.
A. A double bevel blade is a knife that is sharpened with two bevels at the point. The double bevel is used when you are cutting abusive stock to allow more cuts per sharpening. An example would be a 25 degree angle at the point and a 22 degree angle after the point. You can consult your knife sharpening professional to get additional information on the use or need for a double bevel.

Q. How many surfaces are available to use on each cutting stick for an Itotec cutter?
A. Each side of the cutting stick can be used twice, yielding 8 spots to cut into before the cutting stick requires changing.

Q. What materials are available for Itotec knives?
A. Guillotine knives are manufactured with a solid steel body that contain an inlay of different materials that actually perform the cutting of the paper. The body of the knife is carbon steel. The inlays could be carbon steel which is the least durable material. The most common is High Speed Steel which yields quality cuts and stays sharp for the numbers used above in the example. The last material for knife inlay is Carbide Steel which is the most brittle and can be damaged easily but, if treated properly, can yield up to 25,000 or 50,000 cuts. Sharpening Carbide knives is much more expensive and the potential of chipping deters most from using these knives

MORE INFO

+1.262.522.3330 sales@bestgraphics.net bestgraphics.net